PROTAPER NEXT® ROTARY FILES

The Next Evolution in Endodontic File Systems

KEY REFINEMENTS MAKE PROTAPER NEXT® A NEW STANDARD OF EXCELLENCE

More than any company in the world, DENTSPLY Tulsa Dental Specialties has advanced the specialty of endodontics through innovative products and solutions for predictable clinical outcomes. The company's commitment to helping clinicians provide exceptional care for patients can be seen in its long history of scientific research and development. In 2013, DENTSPLY Tulsa Dental Specialties reinforced this legacy of innovation with the introduction of a next generation endodontic file system, PROTAPER NEXT.

Built on the performance of its predecessor, ProTaper® Universal, PROTAPER NEXT features added refinements designed to enhance performance.

The purpose of this white paper is to describe the development and features of PROTAPER NEXT and provide a comparison to ProTaper Universal, currently the world's best-selling endodontic file system.

BACKGROUND

Prior to the mid-1990s, clinicians relied on a slowly developing progression of hand instruments to shape, clean and prepare diseased canals during root canal therapy. The field of endodontics reached a critical evolutionary point in 1993, when DENTSPLY Tulsa Dental Specialties introduced the first generation of nickel titanium (NiTi) rotary instruments, the ProFile® Series 29® rotary file, thereby redefining the endodontic standard of care.

Unlike stainless steel or other alloys traditionally used in endodontic hand files, NiTi is up to three times more flexible than stainless steel and allows curved canals to be prepared in a single continuous motion. This innovation became known as the "first generation" of modern filing systems and made "rotary" synonymous with the Tulsa name.

Nickel Titanium (NiTi), also known as nitinol, exists in two crystal structures, austenite and martensite. NiTi's ability to transfer from one crystal lattice to another allows both shape memory and super-elasticity.[1] These traits allow NiTi to recover its shape easily, making it ideal for applications such as mechanical watch springs, temperature control systems and even golf clubs. NiTi's super-elasticity occurs at a narrow temperature range not requiring heat, which makes it ideal for use in medical products, including peripheral stents, heart valves and endodontic files.

In clinical endodontic use, NiTi's high elasticity reduces forces between the file and canal wall during instrumentation, increasing the likelihood of the file remaining centered in the canal space and lowering the propensity toward preparation errors such as canal straightening.[2]

After setting the industry standards in the 1990s with the introduction of the NiTi rotary file, DENTSPLY Tulsa Dental Specialties took another evolutionary leap with the introduction of ProTaper, which featured, for the first time, multiple increasing and decreasing tapers on a single file. In another "first" in 2007, DENTSPLY Tulsa Dental Specialties introduced M-Wire® NiTi technology, a patented alloy developed through an innovative proprietary metallurgical process to dramatically reduce cyclical fatigue, identified as a drawback to traditional NiTi technology. The company's recently released innovation, PROTAPER NEXT, combines the variable tapers of ProTaper with M-Wire NiTi and other refinements to create the next generation of NiTi rotary file systems: PROTAPER NEXT.

[1] Peters OA. *Rotary Instrumentation: An Endodontic Perspective*. American Association of Endodontists Endodontics Colleagues for Excellence. Winter 2008, p. 4.
[2] Ibid, page 4.

Features

DENTSPLY Tulsa Dental Specialties describes PROTAPER NEXT as "performance refined." Although its ubiquitous predecessor, ProTaper Universal, remains available as the world's leading file system, the newest generation provides three key refinements that appear to shift endodontic file systems into the next gear.

These added PROTAPER NEXT refinements set a new standard for strength, procedural efficiency and flexibility.

GREATER STRENGTH: RECTANGULAR CROSS-SECTION DESIGN

Every clinician who has performed endodontics has experienced the anxiety of accidental breakage, or file separation, in the canal.[3] Breakage is often caused by excessive torsional stress over the active portion of a file. Torsional stress occurs when the tip or any other part of the file is locked or bound within a canal while the shaft continues to rotate.[4] A study by Sattapan and colleagues[5] noted that torsional stress occurred in 55.7% of the fractured files evaluated.

ProTaper Universal files feature a convex triangular cross section that creates a balanced, symmetrical rotary motion as the file progresses down the canal. This triangular shape means the file continually touches the canal walls at three points as it rotates. PROTAPER NEXT features a design refinement: a patented rectangular cross section. Because the cross section is an asymmetrical rectangular and not a symmetrical square or equilateral triangle, the patented design's axis of rotation differs from its center of mass. Specifically, only two points of the cross section touch the canal wall at a time. This innovative design results in greater strength and decreases the probability for laterally compacting debris that can lead to breakage. This is done by enhancing the augering of debris out of a canal.[6]

Compared to a traditional fixed tapered file with a centered cross section, the off-center axis of rotation significantly limits the points of contact between the dentin and the active file. Conversely, this increases the space available for collecting and auguring debris out of the canal. PROTAPER NEXT'S decreased engagement reduces the opportunities for torsional stress in the active file.

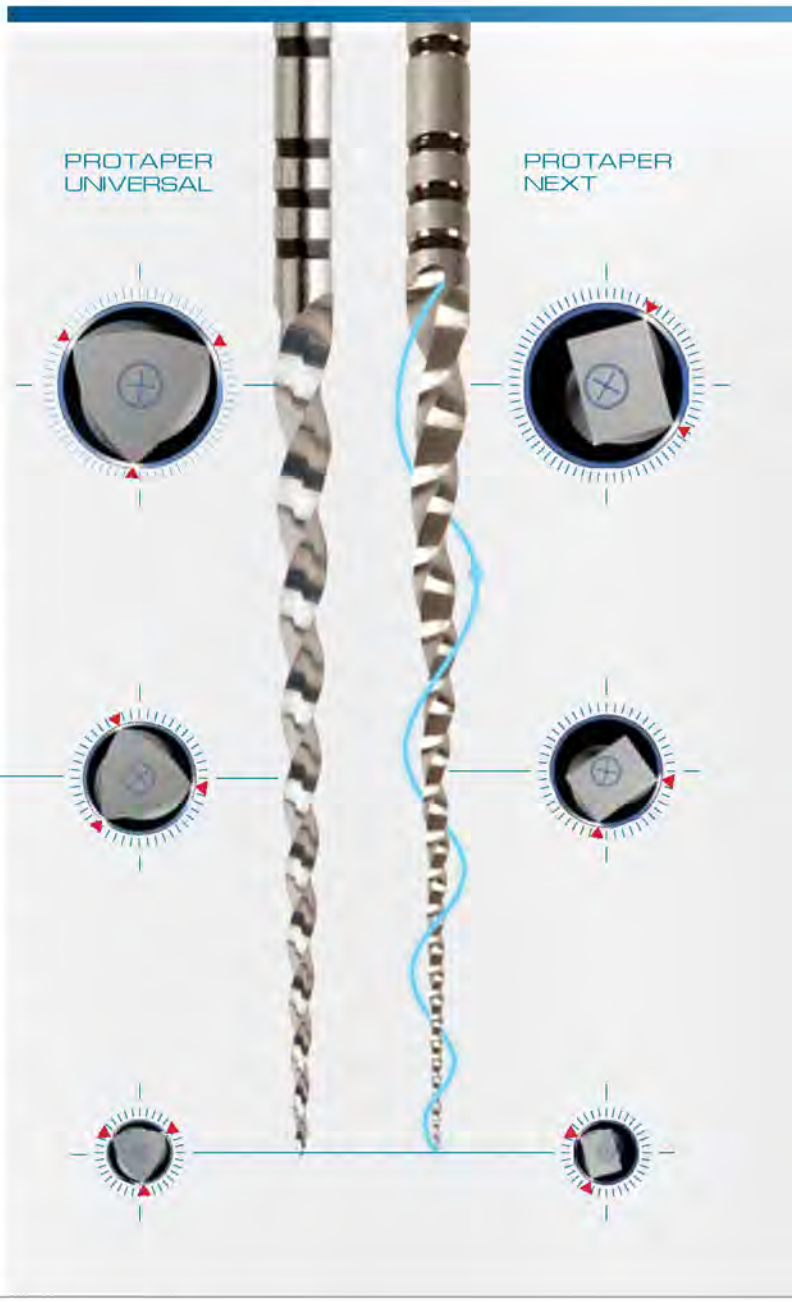

ProTaper Universal features a convex, equillateral triangle cross section that creates the file's familiar symmetric rotation. PROTAPER NEXT (right) features a patented rectangular cross section that creates a unique Asymmetric Rotary (AR) motion.

[3] Ruddle, CJ. Broken instrument removal: the endodontic challenge. *Dentistry Today*, 01 July 2002 00:00.

[4] Bahcall, JK. The causes, prevention, and clinical management of broken endodontic rotary files. *Dentistry Today*, 01 November 2005 00:00.

[5] Sattapan B, Nervo GJ, Palamara JE, et al. Defects in rotary nickel-titanium files after clinical use. *J Endod*. 2000; 26:161-165.

[6] Ruddle CJ, Machtou P, West JD. The shaping movement: fifth-generation technology. *Dentistry Today*, 09 April 2013; 13:46.

GREATER EFFICIENCY: A UNIQUE ASYMMETRIC ROTARY (AR) MOTION

Before the adoption of ProTaper file technology, endodontic procedures typically required numerous files to prepare the canal. The ProTaper revolution provided a variable rate of taper along the cutting flutes of a single file. This allowed clinicians to safely produce deep Schilderian shapes with a shortened sequence of files.[7]

PROTAPER NEXT shifts this feature into high gear with an Asymmetric Rotary (AR) motion that allows a fully tapered canal with fewer files.[8] While the AR effect of the offset cross-section minimizes engagement between the file and the dentin, it also generates a mechanical wave of motion similar to a sinusoidal wave. Though only two cutting points contact the canal wall at any time, PROTAPER NEXT files are able to deliver greater efficiency.

Clinically, this translates into using smaller, more flexible files to create conservative, tapered preparations, thereby reducing the total number of files required to prepare a canal.

PROTAPER NEXT's AR Motion reduces contact points with the canal wall and creates more space for tissue and debris removal. A video of the file's AR Motion can be seen at TulsaDentalSpecialties.com/PROTAPERNEXT.

PROTAPER UNIVERSAL		PROTAPER NEXT	
SX	0.19 / .04		
S1	0.18 / .02	**X1**	0.17 / .04
S2	0.20 / .04		
F1	0.20 / .07	**X2**	0.25 / .06
F2	0.25 / .08		
F3	0.30 / .09	**X3**	0.30 / .07
F4	0.40 / .06	**X4**	0.40 / .06
F5	0.50 / .05	**X5**	0.50 / .06

PROTAPER NEXT offers improved procedural efficiency to achieve fully tapered shapes with fewer files than ProTaper Universal.

ENHANCED ENDURANCE: M-WIRE METALLURGIC ADVANCEMENT

Rotational movement in a curved canal will bend rotary files once per revolution, increasing the likelihood of file hardening and brittle fracture, otherwise known as cyclical fatigue.[9]

DENTSPLY Tulsa Dental Specialties spent years developing and perfecting an innovative thermal-treatment process to create M-Wire NiTi, used in PROTAPER NEXT. The alloy offers greater flexibility than traditional NiTi for navigating challenging, curved canals. It also provides greater resistance to cyclic fatigue, the leading cause of file separation.[10] In cyclical fatigue testing, standard NiTi averages 80 seconds to breakage, compared to M-Wire NiTi, which averages 180 seconds.

Files utilizing M-Wire NiTi allow for deeper flutes and smaller core diameters to increase overall flexibility, while demonstrating a greater resistance to cyclic fatigue. Research by Johnson, Kuttler and colleagues demonstrated that M-Wire NiTi reduced cyclic fatigue by 400% when compared to similar files.[11] Developed through a proprietary process, M-Wire NiTi is only available in DENTSPLY Tulsa Dental Specialties endodontic files, including PROTAPER NEXT.

[7] Ruddle CJ. The ProTaper endodontic system: geometries, features, and guidelines for use. *Dent Today* 2001;20:60-67, as referenced in Ruddle CJ, Machtou P, West JD. The shaping movement: fifth-generation technology. *Dentistry Today*, 09 April 2013; 13:46.

[8] DENTSPLY Tulsa Dental Specialties, internal testing, data on file.

[9] Peters, page 3.

[10] Ya Shen, Gary Shun-pan Cheung, Zbuan Bian, Bin Peng, "Comparison of Defects in ProFile and ProTaper Systems after Clinical Use." *J Endod*, Vol. 32, No. 1 (2006), pp. 61-65.

[11] Johnson E, Lloyd A, Kuttler S, et al. Comparison between a novel nickel-titanium alloy and 508 nitinol on the cyclic fatigue life of ProFile 25/.04 rotary instruments. *J Endod*. 2008;34:1406-1409.

Treatment Technique

The treatment technique with the PROTAPER NEXT system is comparable to the current standard using ProTaper Universal files, with the exception of requiring fewer files per procedure. Many clinicians describe a "brushing" technique used to proceed along the glide path. This brushing motion, used away from external root concavities, facilitates flute unloading and apical file progression. For example, Dr. William Nudera, D.D.S., M.S., says the "off-set rectangular cross section translates to a feeling of smooth apical advancement with every pass." Similarly, Dr. Hong Chon, D.D.S, M.S., attests that "the files glide very smoothly in the canal."

To ensure appropriate use, DENTSPLY Tulsa Dental Specialties recommends clinicians request an in-office demonstration of the PROTAPER NEXT file system. The company also provides directions for use, technique tips and instructional videos on its website at www.TulsaDentalSpecialties.com.

ProTaper Universal and ProTaper Next: A Comparison

Since its introduction in 2001, ProTaper Universal has become the world's top-selling endodontic file. Using exhaustive test data and feedback from clinicians around the world, DENTSPLY Tulsa Dental Specialties refined ProTaper Universal to create PROTAPER NEXT, while maintaining all the best features of the world's leading endodontic files and enhancing them to create a new generation of instrumentation.

SIMILARITIES

Clinicians will observe many similarities between the established ProTaper Universal and the next generation PROTAPER NEXT.

Unlike constant tapered ISO files, ProTaper Universal and PROTAPER NEXT both feature variable tapers. These variable tapers not only improve flexibility and cutting efficiency, but the shape is carried through the system with precision-matched components. Each element of the system works together to intuitively generate a seamless flow from instrumentation to obturation, using precision-matched elements.

Just as with ProTaper Universal, PROTAPER NEXT provides complete, system-based efficiency. Corresponding absorbent points, gutta-percha points and obturators are system matched to fit the variable tapered shapes created by PROTAPER NEXT files. Sequencing and selection continues to be streamlined through consistent easy-to-recognize color coding of each instrument.

The single-use files continue to be pre-sterilized and ready to use. In addition, clinicians are able to use the same light touch in a brushing manner to create lateral space while passively moving deeper into the canal.

PROTAPER NEXT rotary files work with the same motors as ProTaper Universal rotary files. Because of their popularity, ProTaper Universal files continue to be available from DENTSPLY Tulsa Dental Specialties. This is of particular interest to clinicians concerned with the availability of retreatment files.

DIFFERENCES

As the next generation of high performance endodontic files, PROTAPER NEXT features three key refinements as discussed:

- Rectangular cross section design for greater strength.
- Unique Asymmetric Rotary (AR) Motion that further enhances ProTaper canal shaping efficiency. Fewer files are required to achieve the fully tapered ProTaper shape.
- Proven M-Wire NiTi alloy for increased flexibility and resistance to cyclic fatigue.

An additional refinement is PROTAPER NEXT's shorter handle. The older ProTaper Universal handle is 13 mm long, while the new PROTAPER NEXT is 11 mm. This seemingly small change delivers a big impact for clinicians, allowing increased accessibility to hard to reach teeth.

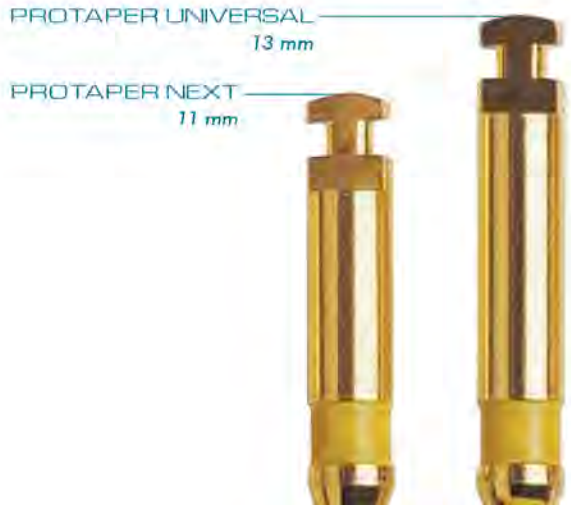

Clinician Perspective

The viewpoints of a practicing clinician who has used both the ProTaper Universal and PROTAPER NEXT file systems is useful in further exploring the differences in the two systems and the benefits achieved through PROTAPER NEXT refinements.

Dr. Shawn Velez, D.D.S., used ProTaper Universal for 10 years prior to incorporating PROTAPER NEXT into his endodontic practice after its introduction.

"The transition to this instrument was very easy, because the system is concise," Velez said. "It borrows from the same philosophy as ProTaper Universal, with the advantage of M-Wire NiTi for increased strength and flexibility."

Dr. Velez said the M-Wire refinement increases the instrument's resistance to failure in any condition.

"This allows me to treat more confidently, knowing I have that advantage," he said.

Dr. Velez also appreciated the file's unique geometry. He said the rectangular offset cross section creates alternating contact points for less contact with the canal wall, creating more space to remove dentin, tissue and debris.

"The tissue comes out very ropey looking, with nothing getting plugged up," he said.

In Dr. Velez's experience, PROTAPER NEXT's rectangular offset cross section allows the instrument to be "strong, very strong, and extremely fast." He is quick to point out, however, that faster does not equate to better, and speed is not his end goal. In his Aiken, South Carolina, practice, PROTAPER NEXT's efficiency simply allows him to devote more time for proper disinfection. He said the conservative shape he achieves with PROTAPER NEXT allows for ideal penetration of a ProRinse® irrigating needle within one to two millimeters of apical preparation.

"In all, PROTAPER NEXT is a very concise endodontic system that can be used to create, in fewer steps, an ideal shape to complete all the objectives necessary for predictable root canal therapy," said Dr. Velez.

He described the ideal shape as the most conservative shape that allows the maximum disinfection and tissue removal to achieve healing.

The Next Evolution Of PROTAPER Performance

Many clinicians have relied on ProTaper Universal files throughout their careers, and these trusted files continue to be available. As the next evolution of the world's leading file system, PROTAPER NEXT files bring a new dimension to the ProTaper offering with their increased strength, flexibility and procedural efficiency. Visit TulsaDentalSpecialties.com for more information including videos on PROTAPER NEXT's unique AR motion, or to request a product demo.

1.800.662.1202
For the latest information consult
www.TulsaDentalSpecialties.com

DENTSPLY
TULSA DENTAL SPECIALTIES

Rx Only